Making a 2D MRI Simple-Circuit 2026

The earth's field magnetic resonance imager was designed using several resources. The magnetic resonance magnetometer circuit was derived from the Geller Labs Magnetometer which was published in Electronics Design Magazine https://www.edn.com/geomagnetic-observatory/.

The Geller circuit was modified for 12V polarization coil operation. The relay contact arrangement was changed to parallel. This allows up to 4 amperes of polarization current. The new configuration grounds the coils by using negative 12V for the polarization supply.

Coil RLC bandwidth was made adjustable by adding a potentiometer. A larger bandwidth is preferred to reduce filter induced amplitude modulation of the frequency shifted signal. The active bandpass filter was changed to a state variable filter with adjustable bandwidth and frequency.

The gradient coil system was designed using the methods outlined by Lother et al.

Steffen Lother, Uno Hoelscher, Thomas Kampf, Peter Jakob, Florian Fidler (2013) 3D gradient system for two B0 field directions in earth's field MRI. Magnetic Resonance Materials in Physics 26:565-573

The gradient coils are the type 2 configuration with a simplified S1 coil (Anti-Helmholtz for the Z direction) and S4 coil (Quadrupole for the Y direction). The image slice is 2D only.

Data acquisition is performed with a Raspberry Pi Pico 2 single board computer and a custom application written using the Lazarus IDE (Free Pascal). A simple 2D Fourier transform is used as opposed to a fast Fourier transform algorithm. The simpler method allows those not familiar with Fourier transforms to view the code and decipher the sine/cosine (I/Q) multiplication used for frequency detection.

Three small circuit boards are required for acquisition and control. CNC routing files are provided for milling single sided copper clad boards. The gradient coil is easily built with hand tools such as an electric drill and soldering iron. However, the coil set for Polarization requires a lathe to turn the forms and for coil winding.

Earth's Field Magnetometer Construction Outline:

- Building the Nuclear Magnetic Resonance Magnetometer Imager
  - The magnetometer is modified Geller Labs Magnetometer Circuit
    - Article available at: https://www.edn.com/geomagnetic-observatory/
    - The relay switching was changed to allow 4 amperes through the contacts
      - Note: The small signal relay NA-5W-K is no longer available. A substitute relay must be a low signal type as power relays may exhibit high contact resistance at low current.
    - The Polarizing Coil LC resonance circuit's Q was made adjustable
    - The preamp input resistance was increased to allow a higher initial Q
    - The preamp filter was changed to a State Variable band pass filter with adjustable Q and frequency
    - A Raspberry Pi Pico 2 SOC was used for data acquisition and control
    - A Pascal application performs control and image computation
      - Can operate in Windows and Linux
      - Source code is supplied
  - Winding the Coil sets
    - Humbucking Polarizing/Detector coils
      - One coil wound CW
      - Second coil wound CCW
    - Gradient Coils: Anti-Helmholtz and Quadrupole
  - Build the Preamp and Bandpass Filter Board
    - CNC route a single sided board
    - Assemble the Low noise differential preamp
    - Assemble the State Variable band pass filter
    - Add the Linear Voltage regulators for Analog Power
  - Build the Relay and Polarizing Circuit Board
    - CNC route a single sided board
    - Install the Relay signal switch
    - Add the MOSFET Polarizing switch
    - Assemble the Adjustable RC circuit for the polarizing/detector coil
  - Build the Controller and Analog Data Acquisition System
    - CNC route a single sided board
    - Install the Pi Pico2 controller with the USB interface
      - Arduino IDE sketch for programming
      - https://github.com/earlephilhower/arduino-pico
    - Add the DC to DC converter for ±15VDC Analog power
    - Install the resistors for control of polarization
    - Add resistive current sources for the Gradient Coils
    - Install analog input filter/limit components for Analog to Digital Conversion of the magnetometer signal

A Little about the Design:

- The Geller NMR magnetometer
  - High polarization field at less than 36watts
  - Adiabatic polarization turn-off used to flip protons
  - Uses counter wound coils
    - Gives very good signal to noise ratio
    - System can be used indoors
    - Outdoor use away from noise works best
  - Sample size is limited to about two-inch length (5cm) by two inch diameter (5cm)
  - Requires a test area with relatively uniform earth's field
    - No shimming is performed
    - May require outdoor location if too much metal present
- NMR Additions required for 2D MRI
  - External gradient coil set
    - Wound on 4.5" outside dia (11.4cm) by 11" (28cm) long PVC pipe form
    - Z-axis Anti-Helmholtz coil set
      - Two 8-turn counter wound coils offset 2" (5cm) from pipe form center
    - Y-axis Quadrupole coil set
      - Four-turn 9.5" (24cm) long loops with adjacent coils counter wound
      - 60 degrees in width spaced at 90 degree intervals

Learning More About How the System Works:

- Read about the Science of NMR and MRI
  - NMR (Nuclear Magnetic Resonance)
    - James A.R. Koehler (2012) Proton Procession Magnetometers, Revision 3
  - MRI (Magnetic Resonance Imaging)
    - Study Gradient Coils and Imaging Techniques
      - Seffen Lother, Uno Hoelscher, Thomas Kampf, Peter Jakob, Florian Fidler (2013) 3D gradient system for two B0 field directions in earth's field MRI. Magnetic Resonance Materials in Physics 26:565-573
      - Meghan E. Halse, Andrew Coy, Robin Dykstra, Craig Eccles, Mark Hunter, Rob Ward, Paut T. Callaghan (2006) A practical and flexible implementation of 3D MRI in the Earth's magnetic field. Journal of Magnetic Resonance 182:75-83
  - Have your library help with finding articles
- Study Signal Processing Math
  - http://www.dspguide.com/
    - The Fourier Transform
    - Complex Fourier Transform
    - Window Functions
    - Two-dimensional Fourier Transform
    - Digital Image Processing
- Learn About Circuit Simulation
  - LTspice IV (Analog Devices)
  - https://www.analog.com/en/resources/design-tools-and-calculators/ltspice-simulator.html
  - Simulate The Electrical Circuits
    - Coil Resonance
    - Coil Polarizing Current
    - Operational Amplifier Circuits
      - Band Pass Filters
      - Amplifiers

The Pico 2 Board Data Acquisition System Functions:

- Polarization FET and Relay Control
  - D4 I/O Out, Relay: 0 = Signal, 1 = Polarize
  - D5 I/O Out, MOSFET: 0 = off, 1 = on
- Frequency encoding Z-coil pulses
  - Use 3.3V Logic Outputs D18 and D17 in Differential Circuit
  - Current is set by 330 ohms of series resistance
- Phase encoding Y-coil pulses
  - Filtered PWM 488KHz for 8-Bit DAC voltage 0 to 3.3V
  - Op Amp buffer to generate a Bipolar DAC Output ±9.4V
  - Current is set by 510 ohm resistor
- Acquire NMR Signal using 12 Bit ADC input A1 averaged 6X
  - 14.286KHz Sample rate (70us)
  - Store up to 16K samples
- Transmit Stored Data
  - Serial UART (USB) 460800 Baud
- Serial Control Command Set
  - The ASCII Character Command Set
  - @PPLnnnn - set the polarization time in ms
  - @RTMnnnn – set the relay settling time in ms
  - @BPSnnnn – set the positive gradient duration ms
  - @GRDnnnn – set the phase DAC gradient level 0-4096 (note: reduced to 8-bit resolution)
  - @DA0nnnn – set the phase DAC zero return level (~2048 is the midpoint)
  - @RMPnnnn – set the post polarization decay wait time ms
  - @MEAnnnn – make a measurement scan and return 4 X nnnn data points (up to 16384 points)
  - @NOInnnn – read 4 x nnnn samples to measure noise
  - @PNGnnnn – read 4 x nnnn samples while pinging Anti-Helmholtz coils (polarizing coil resonance). The input signal is a sine chirp 1700Hz to 2300Hz
  - Where nnnn is 0000 to 9999
  - Commands are terminated with <CR> or <LF>

The User Interface Program:

- Uses the Lazarus IDE for Compiling (Free Pascal)
  - A Precompiled Windows .exe file available
- Serial Communications Interface (via USB)
  - Send serial control commands
    - Step phase coil
    - Set timing delays
    - Start acquisition
    - Receive ADC data as binary serial stream (sent in 2K blocks)
- Process precession data
  - ADC Data to Volts (Displayed as ±1.65V)
  - Fourier transform Y-direction
  - Fourier transform X-direction
  - Magnitude Display Y-Direction Transform and 2-D Image
  - Data Save/Load (raw data format ±8192 to allow up to 14-bits resolution. ADC is 12-bits)
- Use the Gradient Echo Method
  - Polarize Sample
  - Turn off polarization
    - To Flip Protons (Start procession)
    - Delay to complete before switching relay
    - Delay for relay transient to settle
  - Apply gradients
    - Apply Fixed Negative Current to Frequency Coil (Anti-Helmholtz Coil)
    - Simultaneously apply one of ±16 Current Levels to Phase Coil (Quadrupole Coil)
    - Remove both gradients after interval
  - Acquire Precession Data
    - Apply Fixed Positive Current to Frequency Coil
    - Read and save data
    - Zero Frequency Coil
    - Send data to processing program
- Image Formation
  - Apply DFT for frequency encoding
    - Use Precession data from each phase step (33 steps)
      - Sub sample DFT data centered about Precession Frequency
        - 32 points (±16Hz span)
          - Real and Imaginary parts
  - Perform Complex Fourier transform of the 2D array
    - Intermediate X-Y array is 32 frequency points by 33 phase lines
    - Transform in phase direction (array Y-direction)
  - Flip 2D transform result
    - Top edge to center and bottom edge to center
  - Display Image
    - Magnitude of flipped 2D transform result

The Polarization and Proton Flipping Circuit:

The detector is configured as a differential RLC resonator. The capacitor bank C1 to C8 select the damped resonance frequency. The potentiometer P1 changes the bandwidth or Q. The predicted minimum bandwidth for the circuit is around 280Hz. However, measurements revealed a bandwidth of around 86Hz. The improved bandwidth is possibly from positive feedback of the amplified signal. In operation, P1 changes the bandwidth from about 86Hz to 256Hz.

The gradient coils induce a shift around plus and minus 30Hz. Thus, it is important that the bandwidth is wide enough to prevent amplitude modulation of the signal as it traverses the passband.

Capacitors C1 and C2 set the upper frequency. Select C1 and C2 for the magnetic field in your area. Where I live the earth's field is about 46,000nT. The Larmor frequency is 46,000 * 0.04258 = 1959Hz. Use C = C1+C2+0.047uF. Then, C = 1/((2*pi*f)^2 * 0.037H) = 0.18uF. For my case, C1+C2 should be around 0.13uF.

The polarization coil is energized when the relay is actuated and the 12VDC source is powered through the MOSFET M1. The relay is controlled using a common emitter amplifier. The base current is provided through a 3.3V logic output current limited with a series 4.7K resistor. The MOSFET source sits at -12VDC. Note that +12VDC is at ground level. The gate is level shifted from a 3.3V logic signal in series with 220 ohms using a common base amplifier. The gate swings from zero to about 5V above the source voltage.

The relay contacts are rated for 2 amperes. Two contacts activate in parallel to yield a 4 ampere capability. The relay does not make or break with high current. It is activated prior to the MOSFET and deactivated after the current is shut off. The coil signal path is through a single normally closed relay contact.

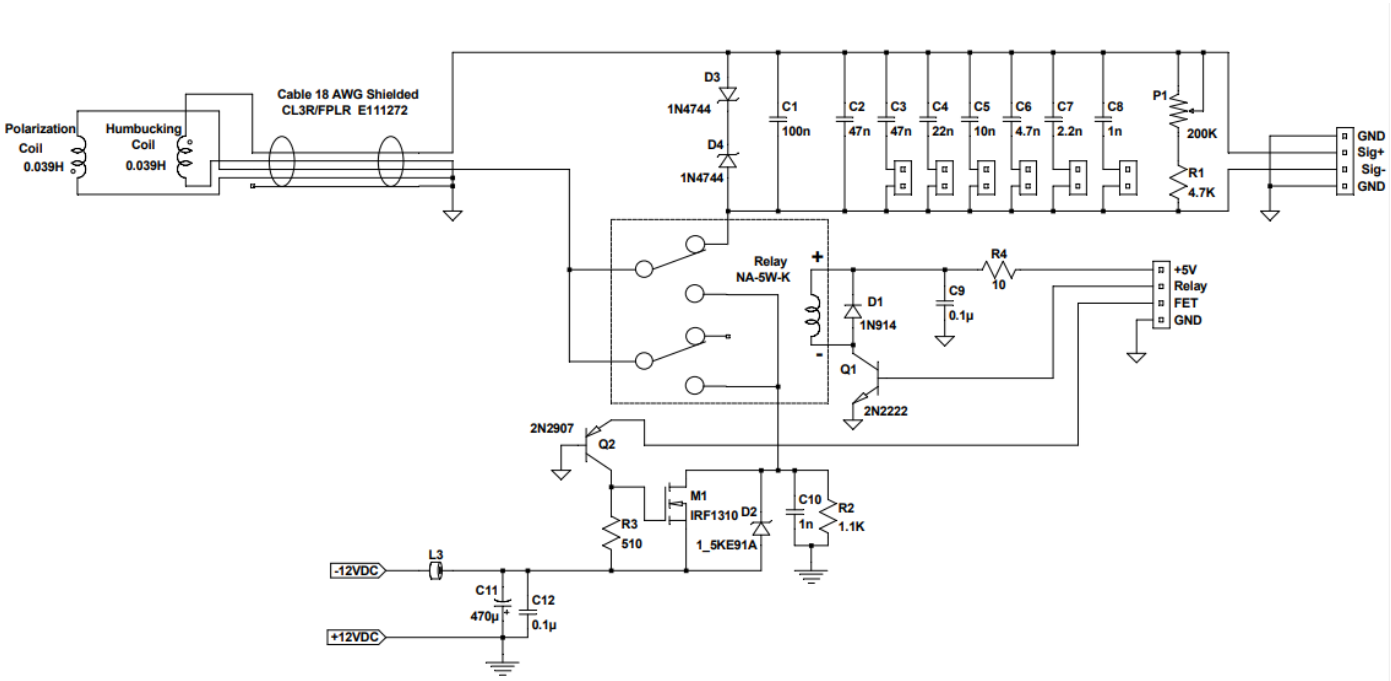

The Preamp and Bandpass Filter Circuit:

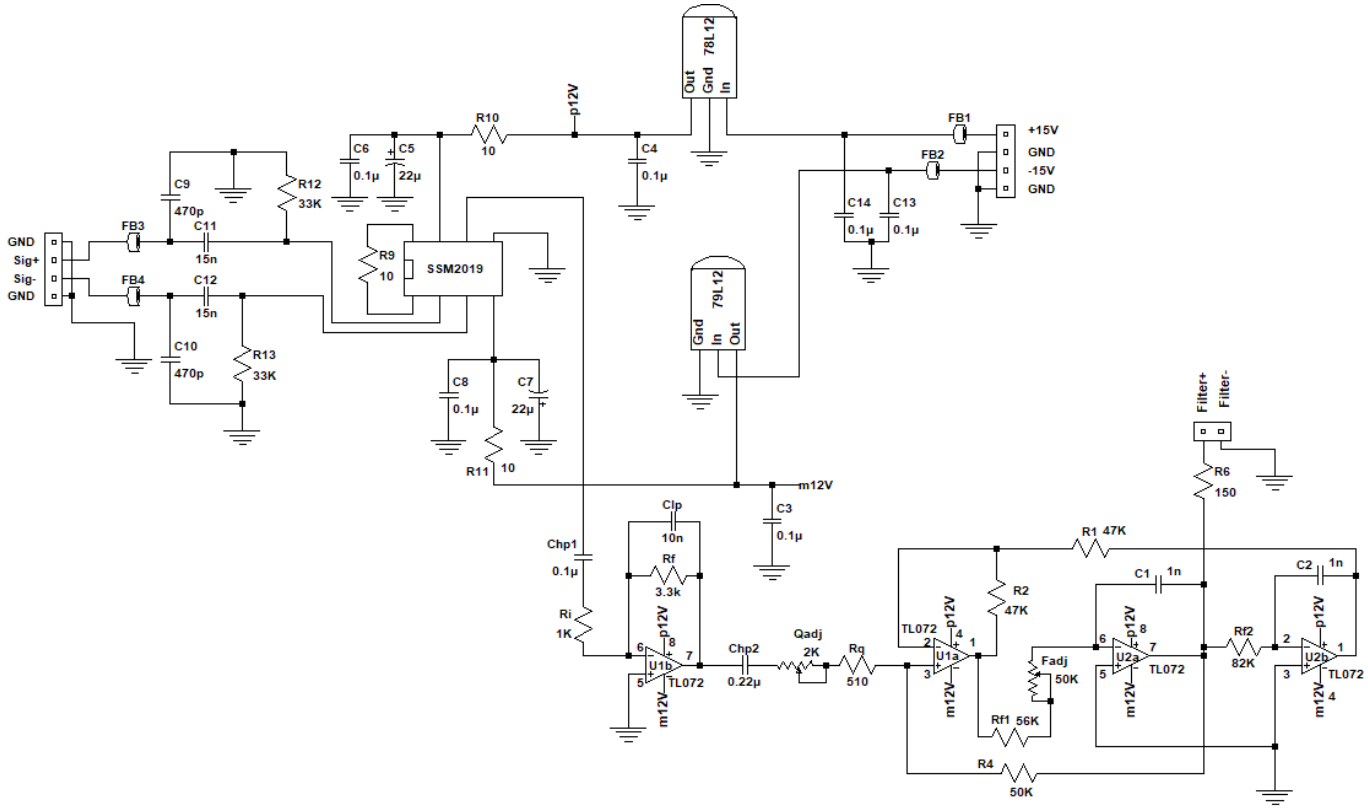

The Controller and Analog Interface:

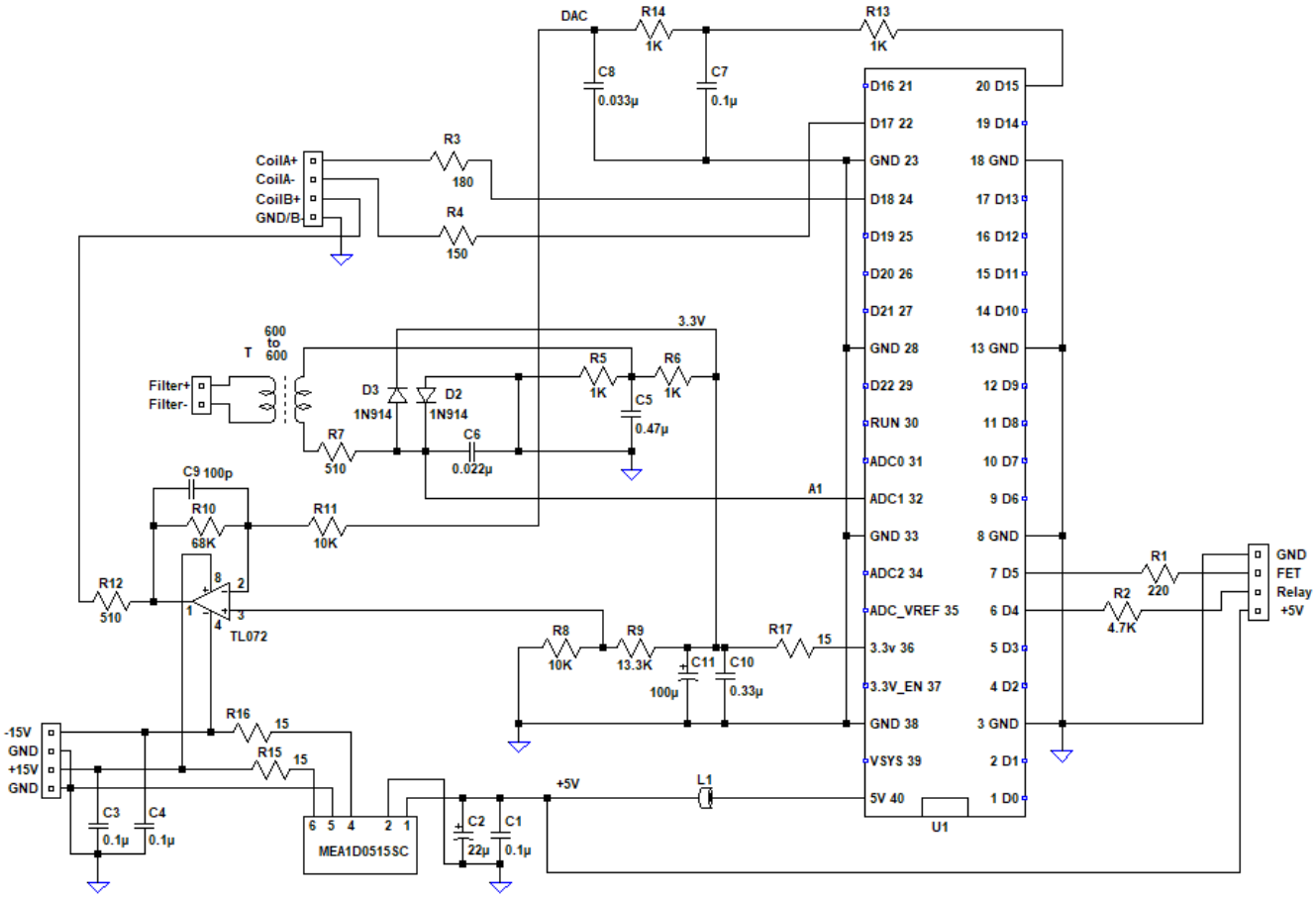

The Frequency Gradient Coil Drive Circuit:

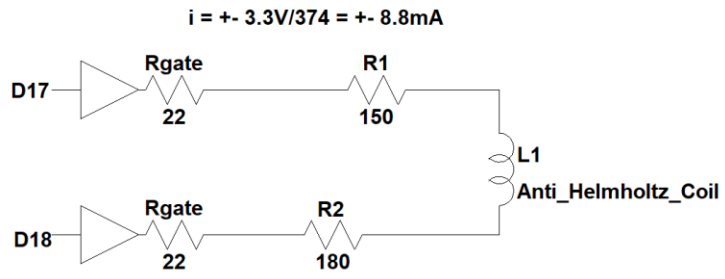

The Phase Coil Drive Circuit:

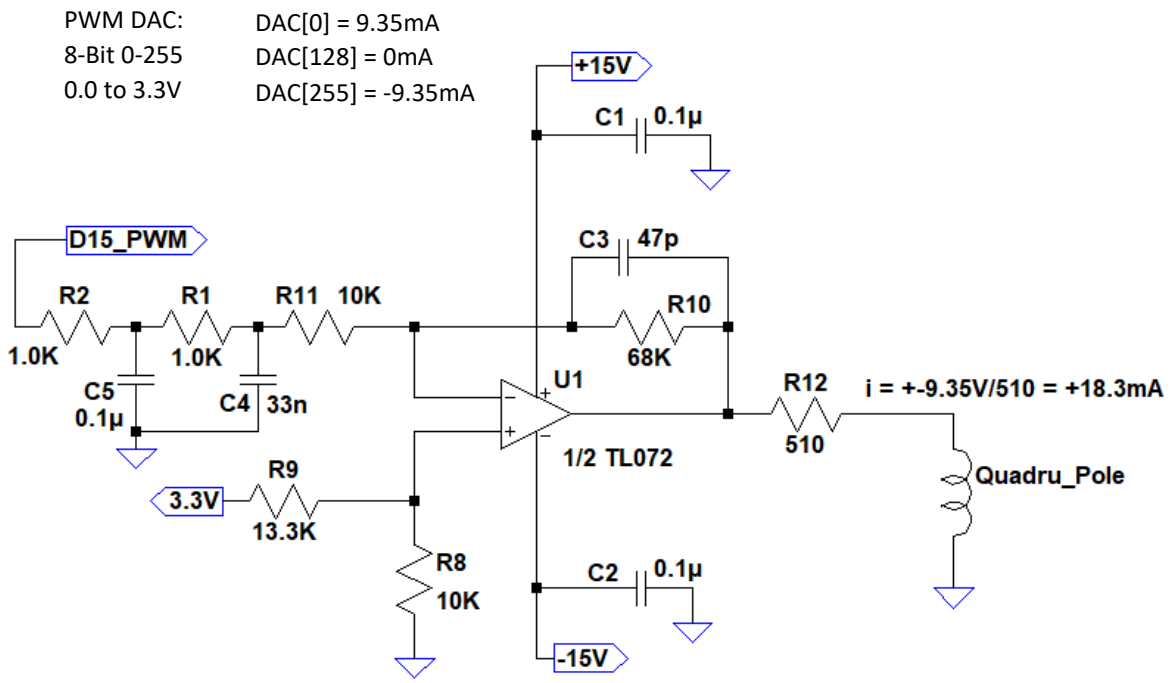

- Basic User Interface Operation
  - Select the Serial Data Port Com Number
    - Click Open Port (If the port is valid, the Red background turns Green)
  - Click the Noise button to check the environment for external noise
  - Ping the coil and adjust the capacitor jumpers and filter frequency for your expected Lamor frequency (set start sample at 1 and end sample at 8000)
  - Place a tube of water in the polarization coil (it should be slightly less than a 2” diameter)
    - Set Start Sample to 500, End Sample to 6000, Procession Freq to 2000, Span to 300
    - Align the gradient tube with magnetic North
      - Perpendicular to the tube length
      - Rotate the Quadrupole coils to align with the downward magnetic North
    - With Phase Step = 17, click Run Test
      - Look for a signal Starting after the initial relay ringing (around 500)
        - Adjust plot gain as needed with the up/down arrows
      - Inspect the frequency plot for peaks (other than noise peaks)
        - Use the up/down arrows to adjust display plot gain
        - The NMR peak should be in the frequency area the filters were set for
  - Change the water sample to a multiple tube sample (two or more tubes)
    - Set Start Sample to 500, End Sample to 6000, Procession Freq to the Lamor peak, Span to 30
    - Click on the Run X-Y button
      - The program will step through 33 phase readings
        - 15 seconds per reading to allow polarization coil cool down
        - The Fourier transform is calculated at each step
    - Click on the 2D button to display the image
      - The Fourier transform of the 33 scans is on the left image side
      - The 2-D Fourier transform is the right image
    - You can change the Start, End, Procession and Span values
      - These values change image quality and left/right position
      - Click FT32 to reprocess
      - Click 2D to update the display
  - Save Data with the Save File button
  - Retrieve Data with the Open File button

The User Interface:

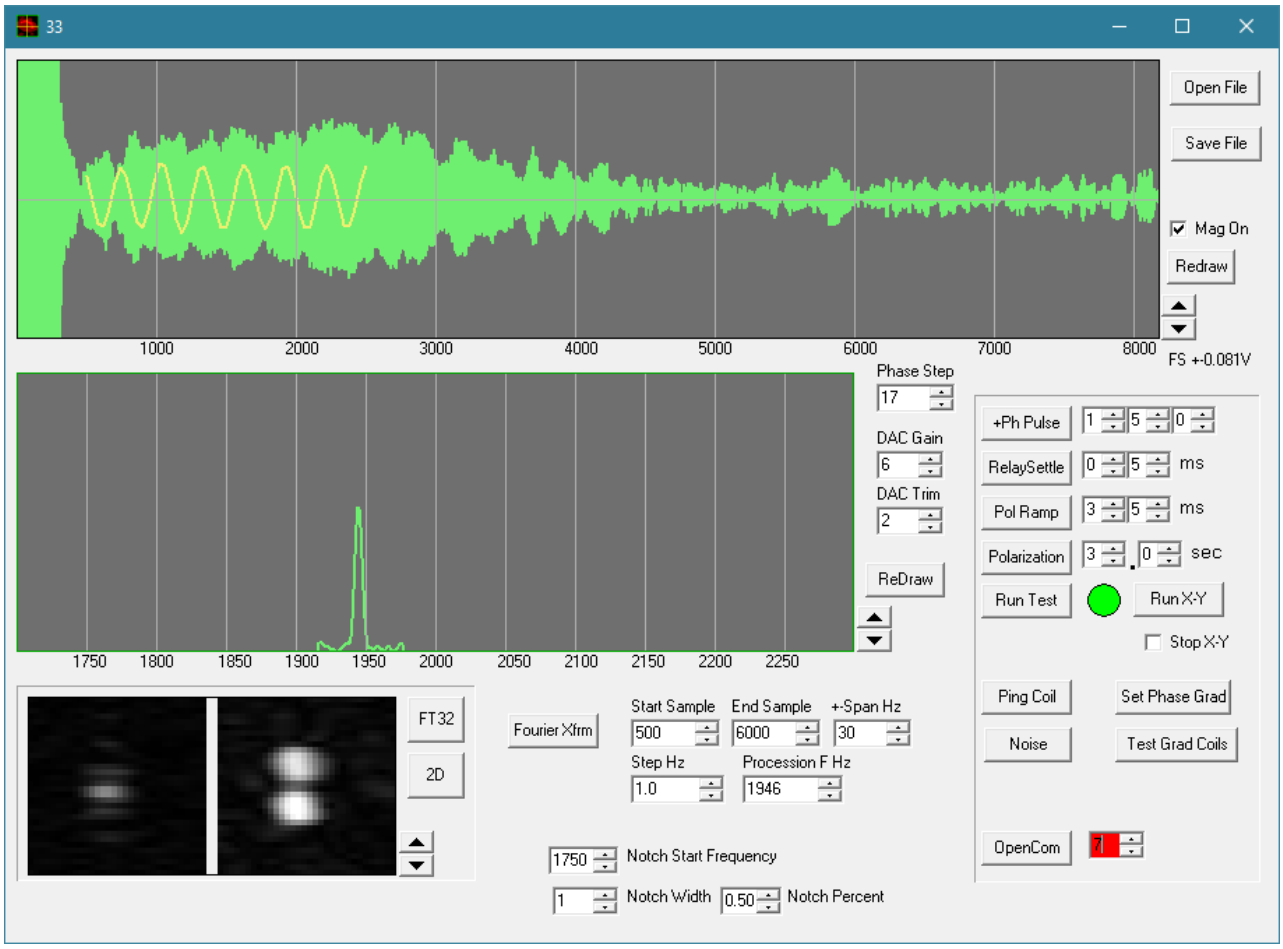

The Gradient Coil Template is on the next page.

Gradient Coil Template. Print two Copies

Pink: Wind 8-loops in down direction
Blue: Wind 8-loops in up direction
Yellow: Wind 4- loops in clockwise direction
Green: Wind 4-loops in counterclockwise direction

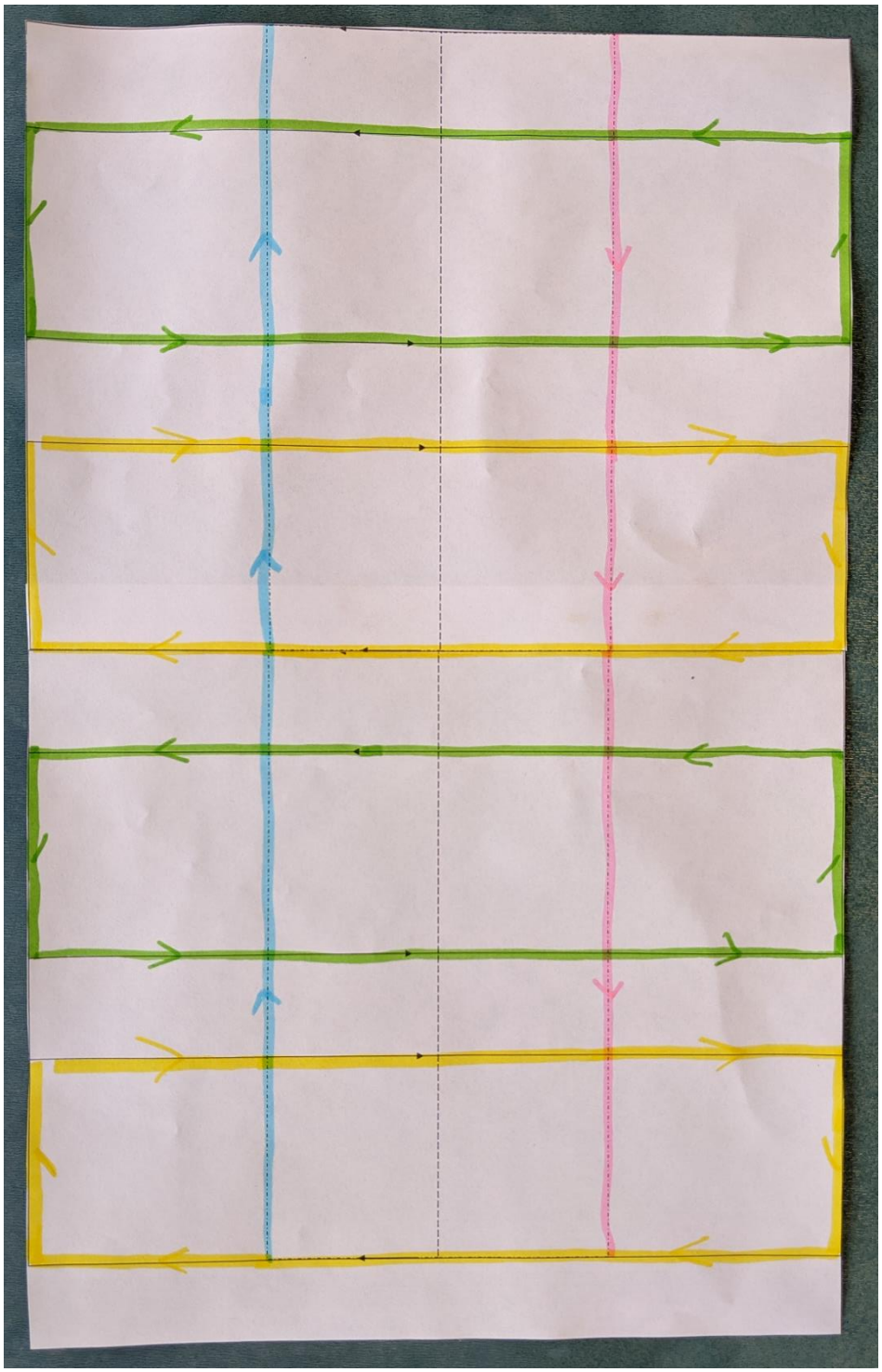

The Polarizing coil form:

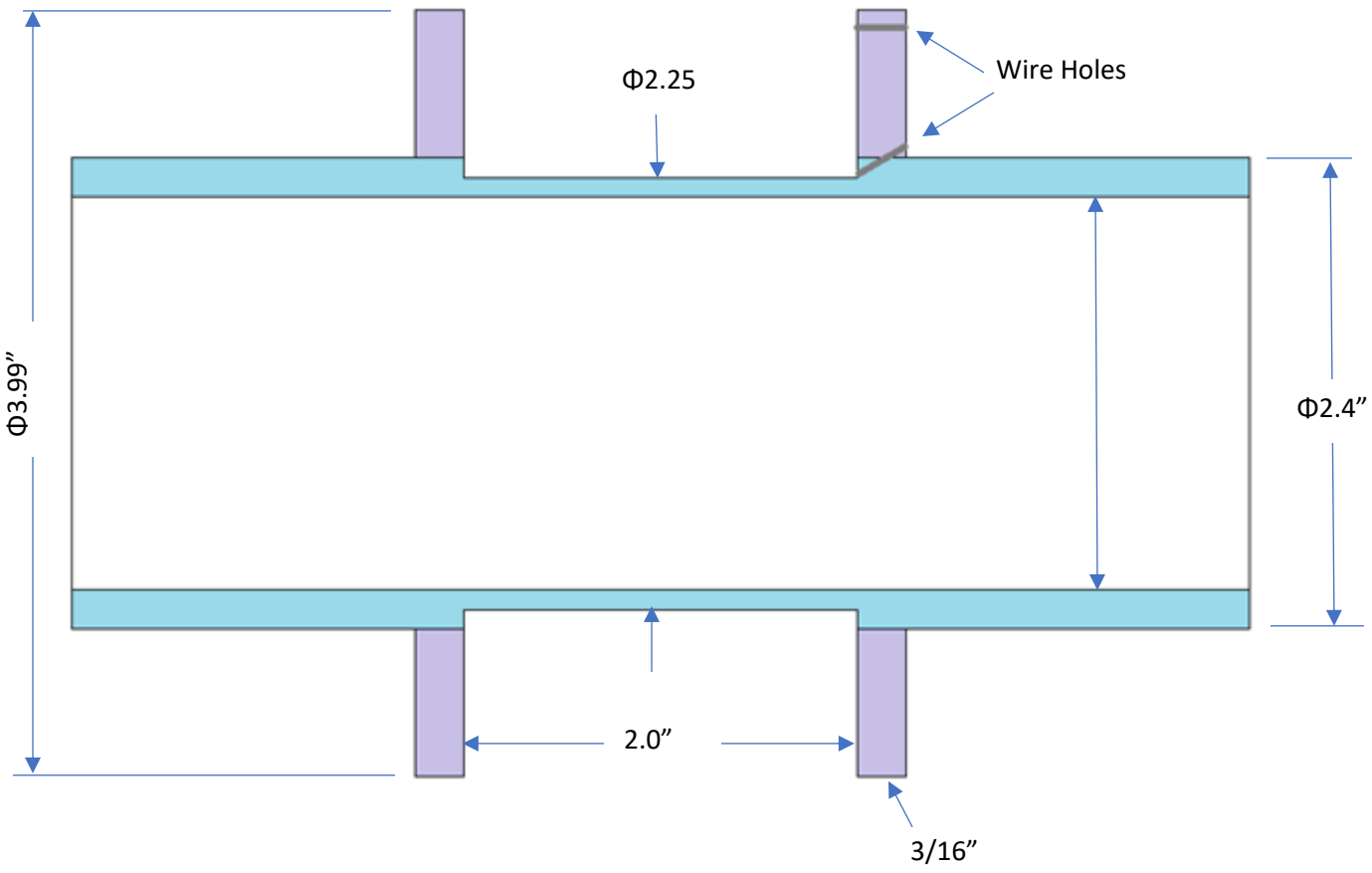

Anti-Helmholtz Coil Winding

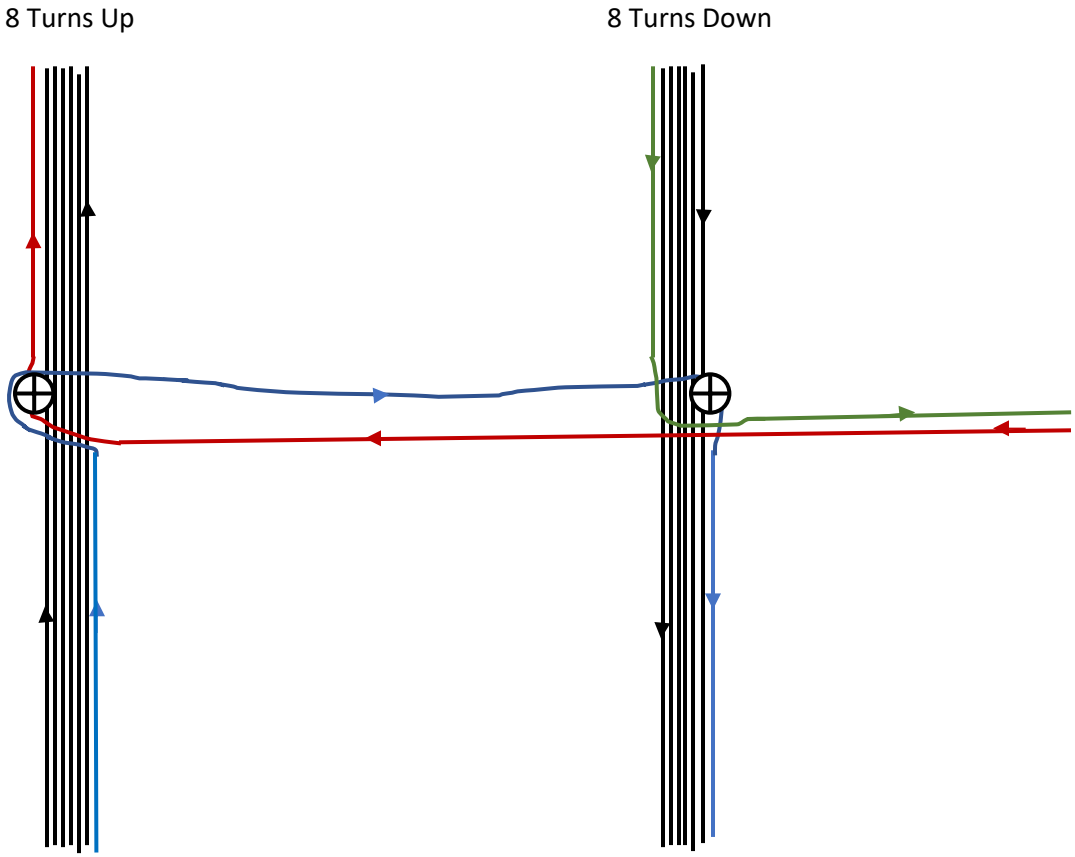

Quadrupole Winding

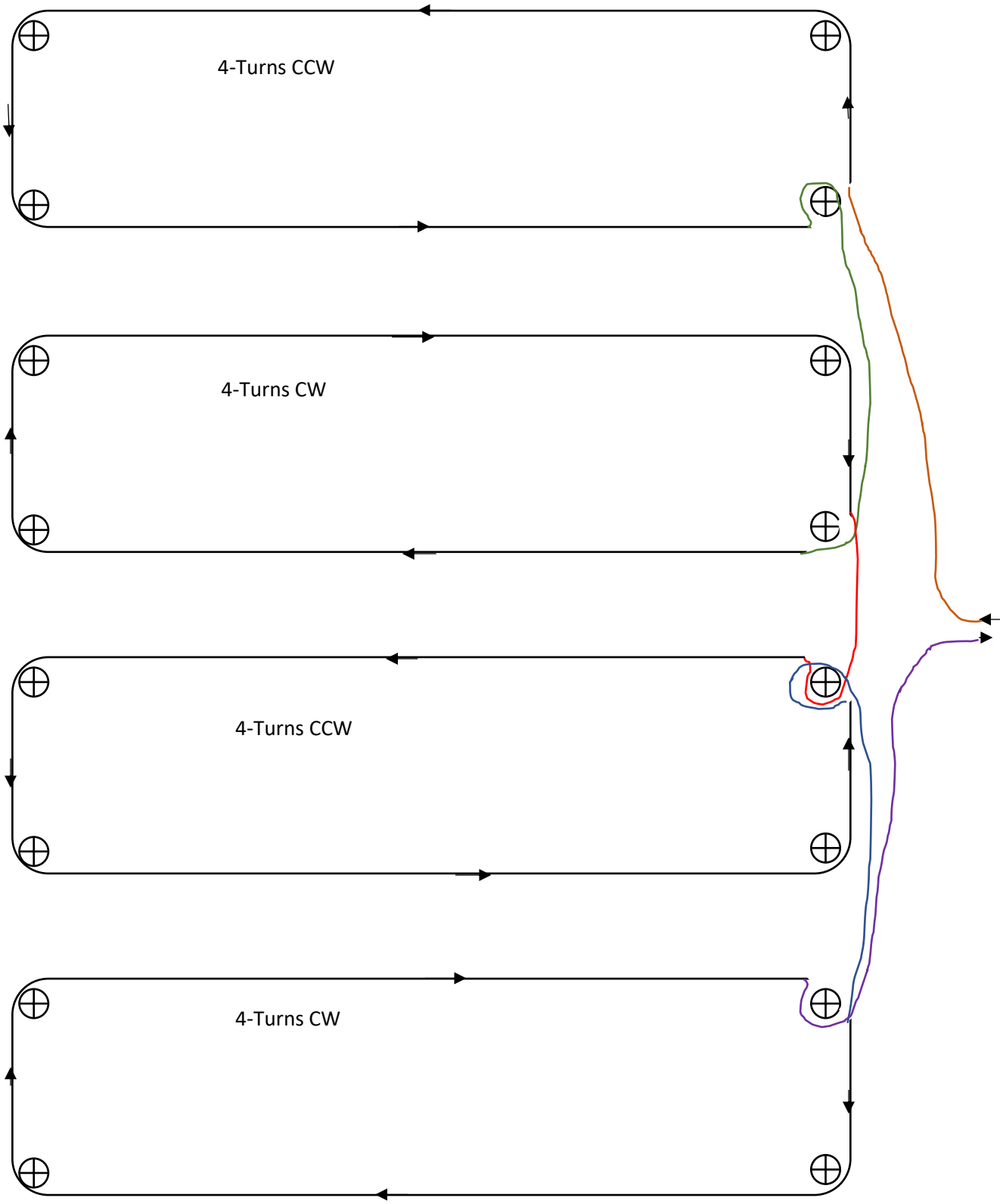

A Completed Gradient Coil Form

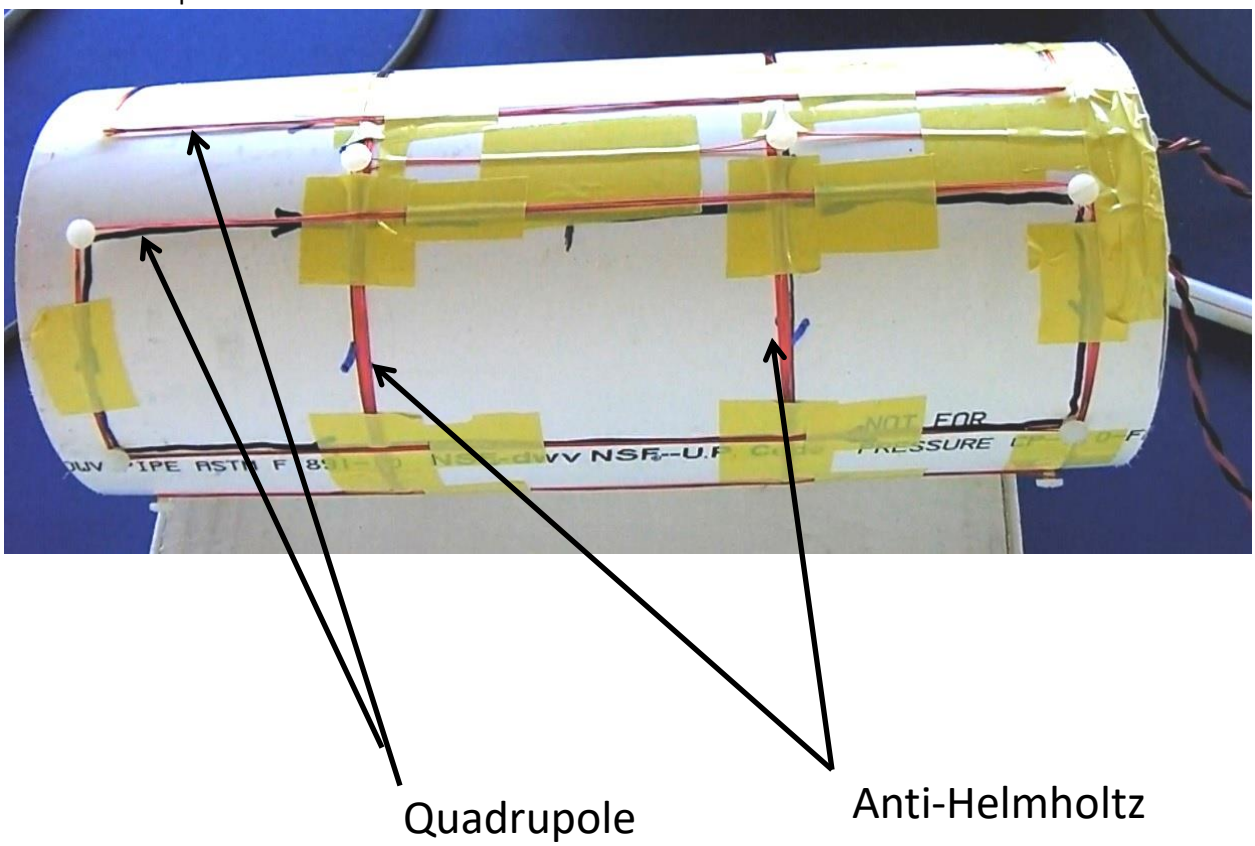

The Coil Winding document contains detailed instructions for construction of the gradient and polarization coils. Also included are the PCB component locations for the three boards.

Included Files for Building this project:

simpleMRI.exe	The Windows User Interface (does not need hardware to load examples)
simpleMRI	Lazarus source code folder
mri_pico2_g.ino.rpipico2.uf2	Pi Pico 2 uf2 program file
mri_pico2_g	Pi Pico 2 Arduino source code folder
Profile_EFM_pico.gcode	controller PCB CNC profile
Profile_EFM_pico.gcode	controller PCB CNC drill
Profile_polarizer_e.gcode	polarizer PCB CNC profile
drill_polarizer_e.gcode	polarizer PCB CNC drill
Profile_preamp_filter.gcode	preamp/filter PCB CNC profile
Drill_preamp_filter.gcode	preamp/filter PCB CNC drill

Software for the Pico board requires that you install the Arduino IDE (I use version 1.8.12) and Earle Philhower's Ardino-Pico. Follow the instructions for "Installing via Arduino Boards Manager". These are found at:

https://github.com/earlephilhower/arduino-pico
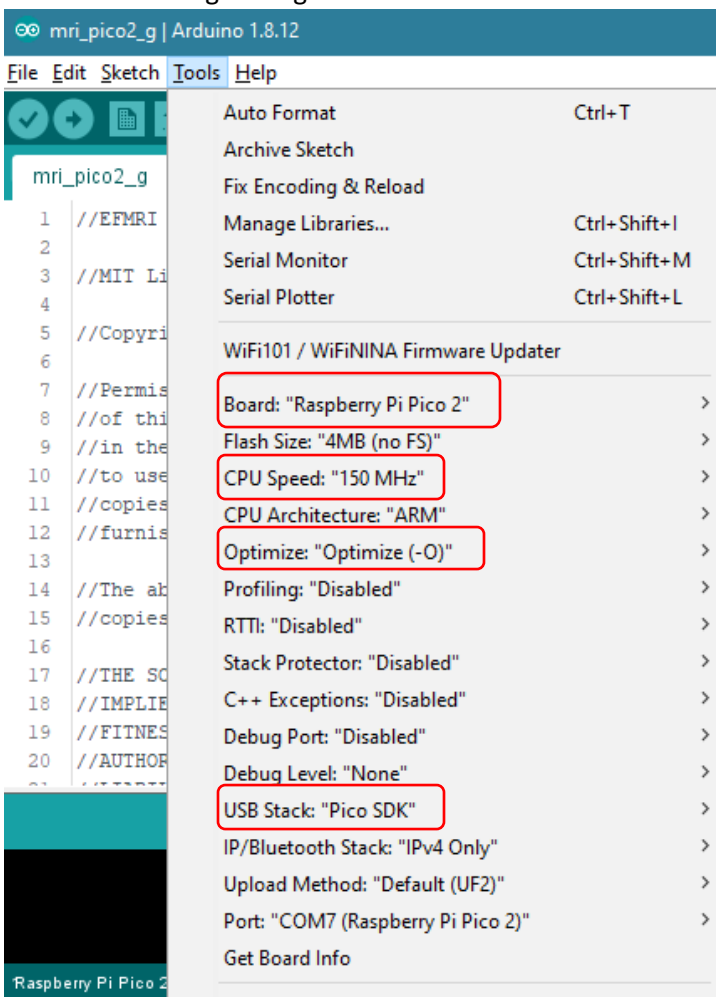
Use the following settings: